## SB2 (Light-duty)

## Ball Bearings

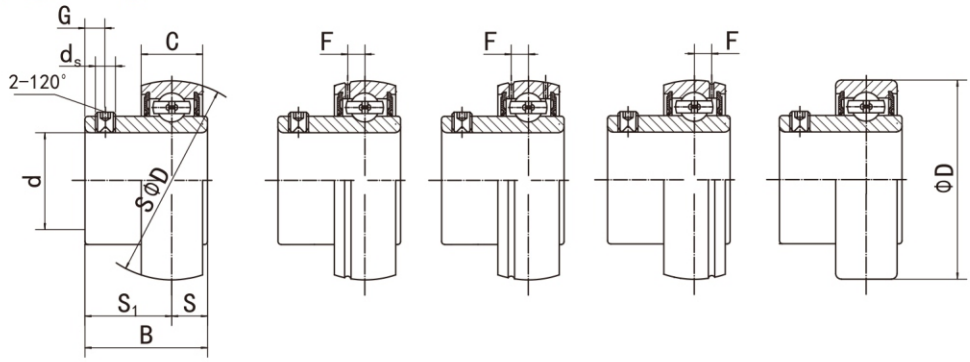


SB2 SB2-G SB2-$G_2$ SB2-RG CSB2

J type seal (Standard)

H type seal (Optional)

| Bearing NO. | Dimensions ( mm / in. ) | | | | | | | | | Dynamic load ratings (N) | Static load ratings (N) | Weight (kg) |
|---|---|---|---|---|---|---|---|---|---|---|---|---|
| | d | D | B | C | S | $S_1$ | $d_s$ | F | G | | | |
| **SB201** | 12 | 40 | 22.0 | 12 | 6.0 | 16.0 | M5X0.8 | 3.4 | 4.5 | 9600 | 4600 | 0.10 |
| 201-8 | 1/2 | 1.5748 | 0.8661 | 0.4724 | 0.236 | 0.630 | 10-32UNF | 0.134 | 0.177 | | | 0.10 |
| **SB202** | 15 | 40 | 22 | 12 | 6.0 | 16.0 | M5X0.8 | 3.4 | 4.5 | 9600 | 4600 | 0.10 |
| 202-9 | 9/16 | 1.5748 | 0.8661 | 0.4724 | 0.236 | 0.630 | 10-32UNF | 0.134 | 0.177 | | | 0.10 |
| 202-10 | 5/8 | | | | | | | | | | | 0.10 |
| **SB203** | 17 | 40 | 22.0 | 12 | 6.0 | 16.0 | M5X0.8 | 3.4 | 4.5 | 9600 | 4600 | 0.09 |
| 203-11 | 11/16 | 1.5748 | 0.8661 | 0.4724 | 0.236 | 0.630 | 10-32UNF | 0.134 | 0.177 | | | 0.09 |
| **SB204** | 20 | 47 | 25.0 | 14 | 7.0 | 18.0 | M6X1 | 4.2 | 4.5 | 12800 | 6600 | 0.13 |
| 204-12 | 3/4 | 1.8504 | 0.9843 | 0.5512 | 0.276 | 0.709 | 1/4-28UNF | 0.165 | 0.177 | | | 0.14 |
| **SB205** | 25 | 52 | 27 | 15 | 7.5 | 19.5 | M6X1 | 4.3 | 5.5 | 14000 | 7850 | 0.16 |
| 205-13 | 13/16 | 2.0472 | 1.063 | 0.5906 | 0.295 | 0.768 | 1/4-28UNF | 0.169 | 0.217 | | | 0.19 |
| 205-14 | 7/8 | | | | | | | | | | | 0.18 |
| 205-15 | 15/16 | | | | | | | | | | | 0.17 |
| 205-16 | 1 | | | | | | | | | | | 0.16 |
| **SB206** | 30 | 62 | 30 | 16 | 8.0 | 22.0 | M6X1 | 5 | 6 | 19450 | 11250 | 0.25 |
| 206-17 | 1-1/16 | 2.4409 | 1.1811 | 0.6299 | 0.315 | 0.866 | 1/4-28UNF | 0.197 | 0.236 | | | 0.28 |
| 206-18 | 1-1/8 | | | | | | | | | | | 0.26 |
| 206-19 | 1-3/16 | | | | | | | | | | | 0.25 |
| 206-20 | 1-1/4 | | | | | | | | | | | 0.24 |
| **SB207** | 35 | 72 | 32 | 17 | 8.5 | 23.5 | M8X1 | 5.6 | 6.5 | 25700 | 15200 | 0.36 |
| 207-20 | 1-1/4 | 2.8346 | 1.2598 | 0.6693 | 0.335 | 0.925 | 5/16-24UNF | 0.220 | 0.256 | | | 0.41 |
| 207-21 | 1-5/16 | | | | | | | | | | | 0.39 |
| 207-22 | 1-3/8 | | | | | | | | | | | 0.36 |
| 207-23 | 1-7/16 | | | | | | | | | | | 0.35 |
| **SB208** | 40 | 80 | 34 | 18 | 9.0 | 25.0 | M8X1 | 5.9 | 7 | 29500 | 18100 | 0.45 |
| 208-24 | 1-1/2 | 3.1496 | 1.3386 | 0.7087 | 0.354 | 0.984 | 5/16-24UNF | 0.232 | 0.276 | | | 0.43 |
| 208-24 | 1-9/16 | | | | | | | | | | | 0.45 |
| **SB209** | 45 | 85 | 41.2 | 19 | 10.2 | 31.0 | M8X1 | 6.1 | 8.2 | 32700 | 20900 | 0.54 |
| 209-26 | 1-5/8 | 3.3465 | 1.622 | 0.748 | 0.402 | 1.22 | 5/16-24UNF | 0.240 | 0.323 | | | |
| 209-27 | 1-11/16 | | | | | | | | | | | |
| 209-28 | 1-3/4 | | | | | | | | | | | |
| **SB210** | 50 | 90 | 43.5 | 20 | 10.9 | 32.6 | M10X1 | 6.5 | 9.2 | 35000 | 23200 | 0.62 |
| 210-29 | 1-13/16 | 3.5433 | 1.7126 | 0.7874 | 0.429 | 1.283 | 3/8-24UNF | 0.256 | 0.362 | | | |
| 210-30 | 1-7/8 | | | | | | | | | | | |
| 210-31 | 1-15/16 | | | | | | | | | | | |
| 210-32 | 2 | | | | | | | | | | | |
| **SB211** | 55 | 100 | 45.3 | 21 | 11.8 | 33.5 | M10X1 | 7 | 9.8 | 43300 | 29200 | 0.81 |
| 211-32 | 2 | 3.937 | 1.7835 | 0.8268 | 0.465 | 1.319 | 3/8-24UNF | 0.276 | 0.386 | | | |
| 211-33 | 2-1/16 | | | | | | | | | | | |
| 211-34 | 2-1/8 | | | | | | | | | | | |
| 211-35 | 2-3/16 | | | | | | | | | | | |
| **SB212** | 60 | 110 | 53.7 | 22 | 14.9 | 38.8 | M10X1 | 7.4 | 9.8 | 47700 | 32800 | 1.14 |
| 212-36 | 2-1/4 | 4.3307 | 2.1142 | 0.8661 | 0.587 | 1.528 | 3/8-24UNF | 0.291 | 0.386 | | | |
| 212-37 | 2-5/16 | | | | | | | | | | | |
| 212-38 | 2-3/8 | | | | | | | | | | | |
| 212-39 | 2-7/16 | | | | | | | | | | | |