Pillow Blocks

NCP2 (Normal-duty)

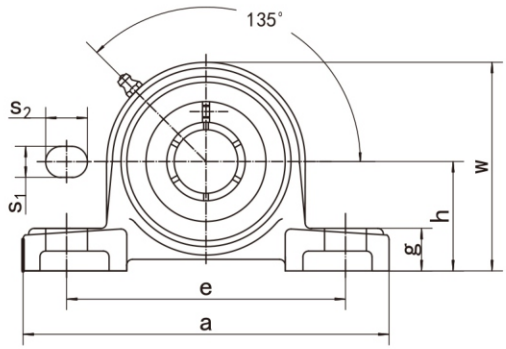

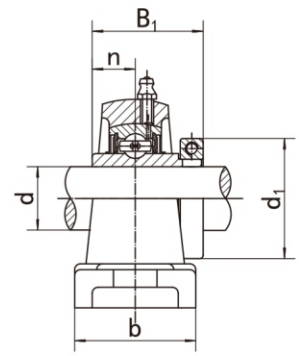

Unit NO.	Dimensions (mm / in.)												Bolt Size mm/in.	Bearing No.	Housing No.	Weight (kg)
	d	d1	h	a	e	b	s1	s2	g	w	B1	n				
NCP204	20	44.5	33.3	127	95	38	13	19	14	65	33.4	12.7	M10	NC204	P204	0.79
204-12	3/4	1-3/4	1-5/16	5	3-3/4	1-1/2	1/2	3/4	9/16	2-9/16	1.315	0.500	3/8	NC204-12		
NCP205	25	49.2	36.5	140	105	38	13	19	15	71	36.5	14.3	M10	NC205	P205	0.97
205-14	7/8													NC205-14		
205-15	15/16	1-15/16	1-7/16	5-1/2	4-1/8	1/1/2	1/2	3/4	19/32	2-25/32	1.437	0.563	3/8	NC205-15		
205-16	1													NC205-16		
NCP206	30	55.6	42.9	160	121	44	17	20	17	84	39.7	15.9	M14	NC206	P206	1.40
206-18	1-1/8													NC206-18		
206-19	1-3/16	2-3/16	1-11/16	6-19/64	4-3/4	1-47/64	43/64	25/32	21/32	3-5/16	1.563	0.626	1/2	NC206-19		
206-20	1-1/4													NC206-20		
NCP207	35	65.1	47.6	167	127	48	17	20	18	93	44.5	17.5	M14	NC207	P207	1.81
207-20	1-1/4	2-7/16												NC207-20		
207-22	1-3/8	2-9/16	1-7/8	6-9/16	5	1-7/8	43/64	25/32	45/64	3-21/32	1.752	0.740	1/2	NC207-22		
207-23	1-7/16													NC207-23		
NCP208	40	68.3	49.2	184	137	54	17	20	18	100	50.8	19.0	M14	NC208	P208	2.26
208-24	1-1/2	2-11/16	1-15/16	7-1/4	5-13/32	2-1/8	43/64	25/32	45/64	3-15/16	2	0.748	1/2	NC208-24		
NCP209	45	74.6	54.0	190	146	54	17	20	20	106	50.8	19.0	M14	NC209	P209	2.51
209-26	1-5/8	2-13/16												NC209-26		
209-27	1-11/16	2-15/16	2-1/8	7-15/32	5-3/4	2-1/8	43/64	25/32	25/32	4-11/64	2	0.748	1/2	NC209-27		
209-28	1-3/4													NC209-28		
NCP210	50	85.7	57.2	206	159	60	20	23	21	113	53.1	19.0	M16	NC210	P210	3.26
210-31	1-15/16	3-3/8	2-1/4	8-1/8	6-1/4	2-3/8	25/32	29/32	53/64	2-29/64	2.091	0.748	5/8	NC210-31		
210-32	2													NC210-32		
NCP211	55	92.1	63.5	219	171	60	20	23	23	125	57.1	22.2	M16	NC211	P211	3.74
211-32	2	3-1/2	2-1/2	8-5/8	6-47/64	2-3/8	25/32	29/32	29/32	4-59/64	2.248	0.874	5/8	NC211-32		
211-35	2-3/16	3-5/8												NC211-35		
NCP212	60	104.8	69.8	241	184	70	20	23	25	138	66.7	25.4	M16	NC212	P212	5.25
212-36	2-1/4	4-1/16	2-3/4	9-1/2	7-1/4	2-3/4	25/32	29/32	63/64	5-7/16	2.626	1.000	5/8	NC212-36		
212-39	2-7/16	4-1/8												NC212-39		